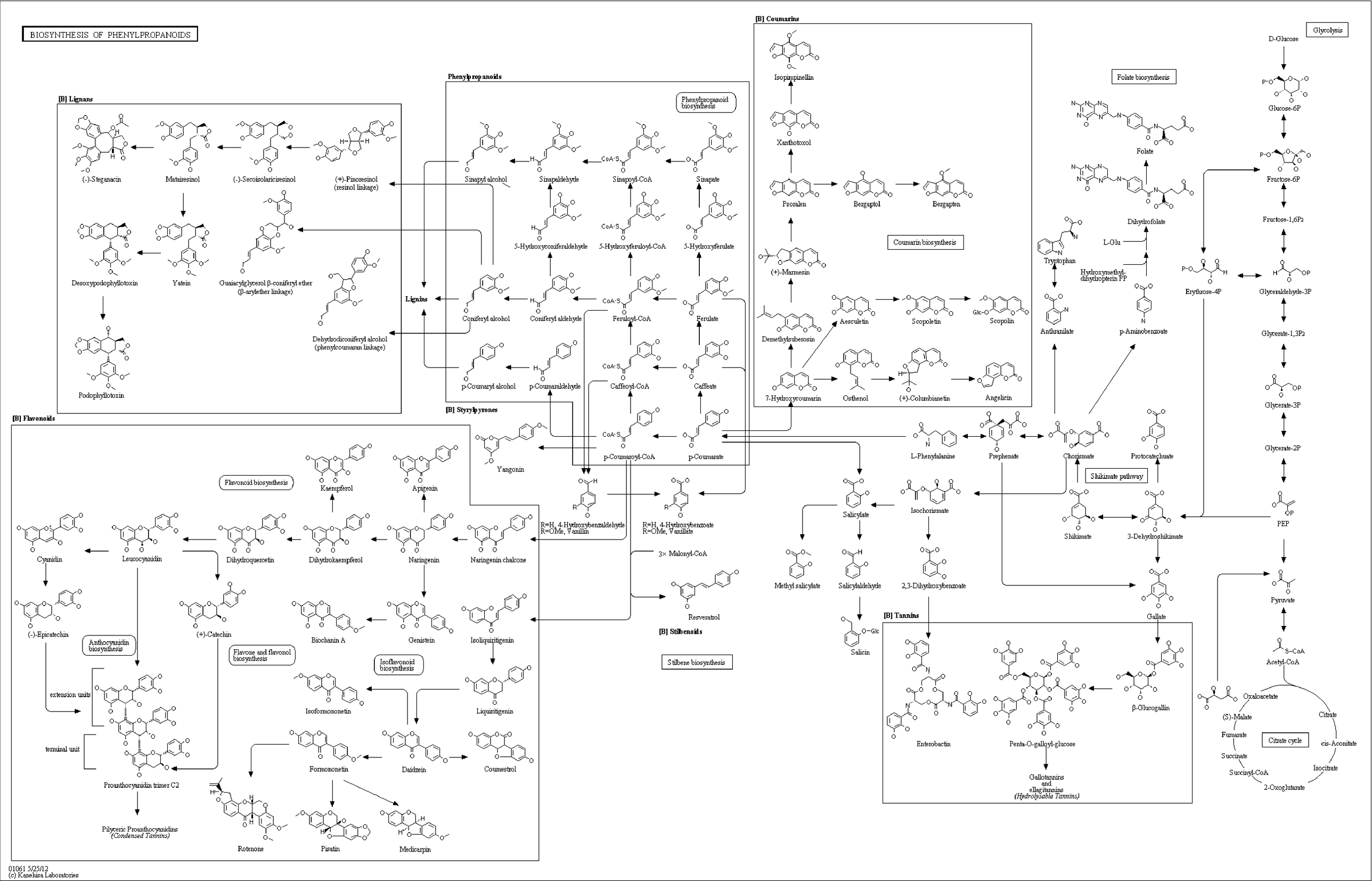

01061 5/25/12
(c) Kanehisa Laboratories