GLYCOSPHINGOLIPID BIOSYNTHESIS - GANGLIO SERIES

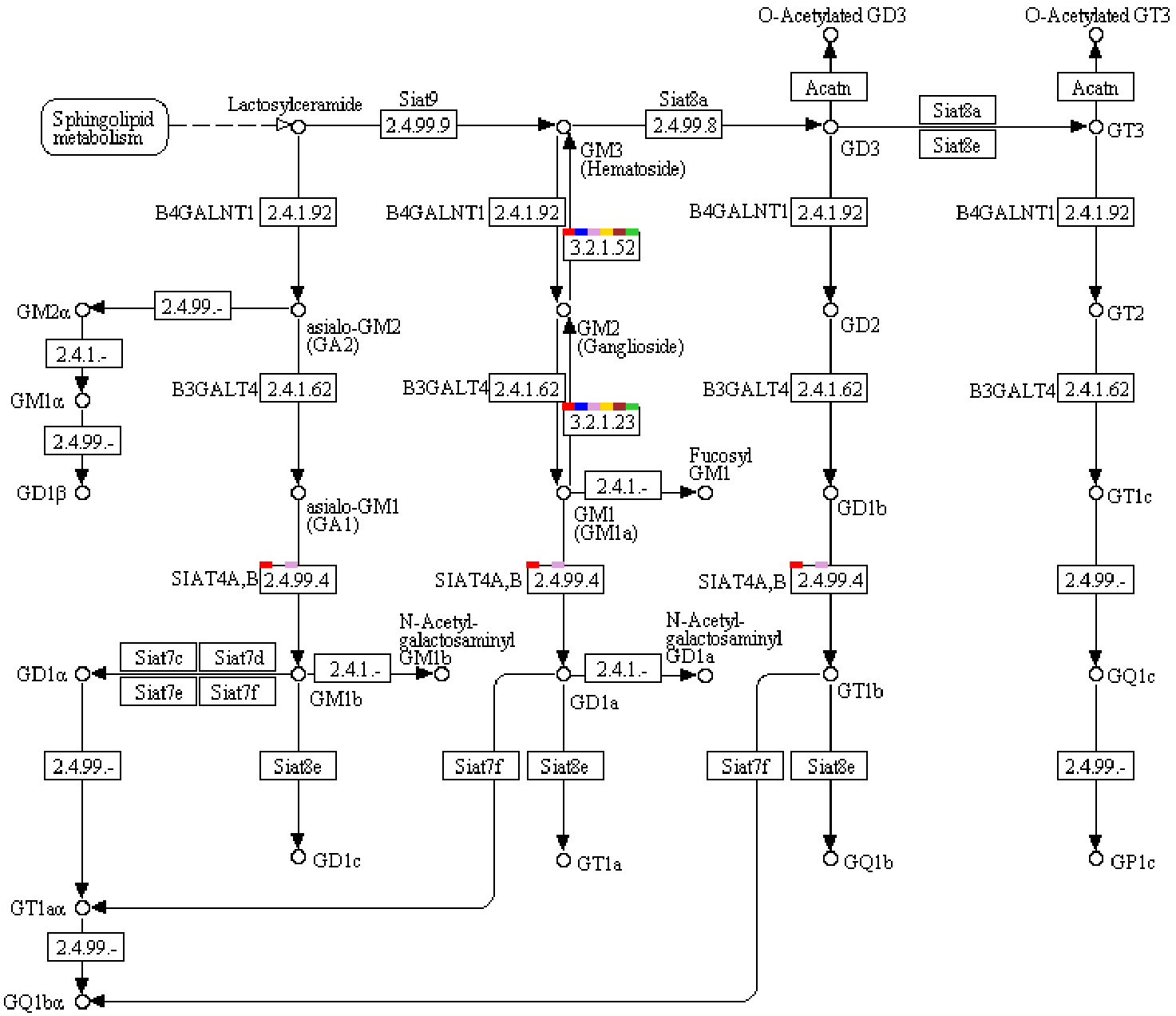

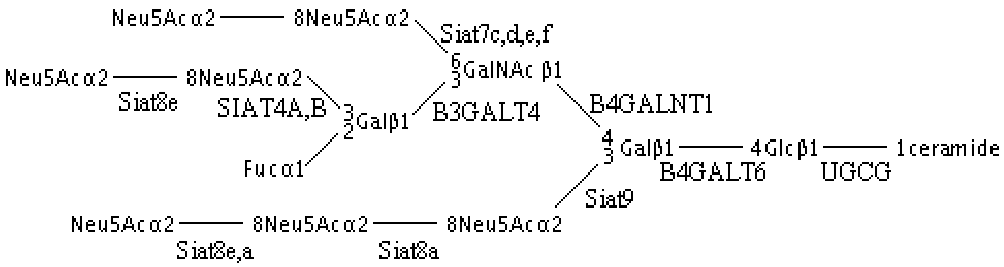

00604 7/2/12
(c) Kanehisa Laboratories