BRASSINOSTEROID BIOSYNTHESIS

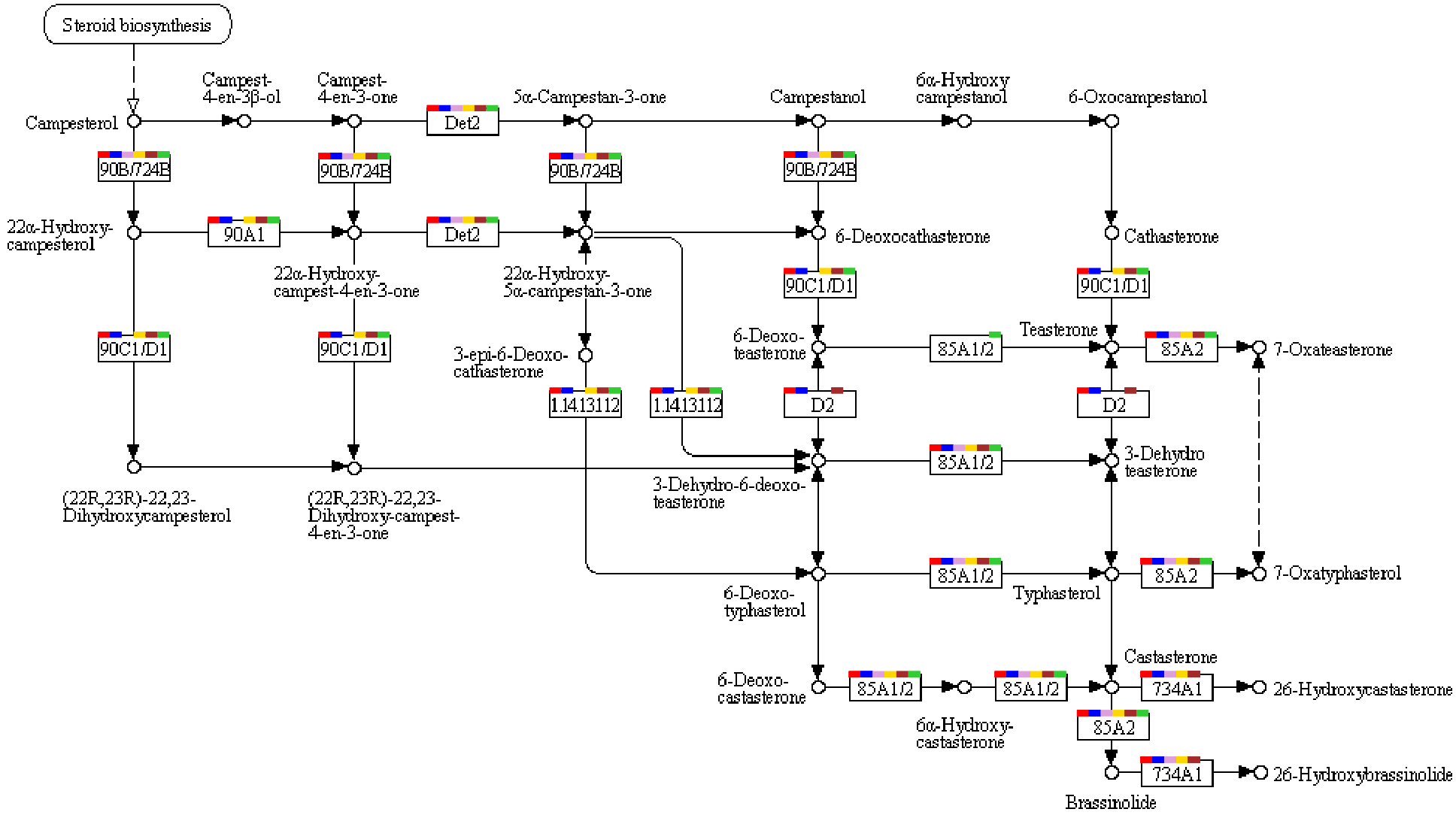

00905 4/18/13
(c) Kanehisa Laboratories